EXXEL PACIFIC
GENERAL CONTRACTORS

Request For Information - 065.1

The Cora Apartments (19 W Harrison)

DATE: 02/02/2017

To:	**John Whitlow**	**From**	**Jola Bielecki**
	VIA Architecture 1809 7th Avenue, Suite 800 Seattle, WA 98101		The Cora Apartments (19 W Harrison) 19 W Harrison Seattle, WA 98109
Phone:	206-995-8872	**Phone:**	425-502-1573
Fax:		**Fax:**	360-671-7616
Email:	jwhitlow@via-architecture.com	**Email:**	jolab@exxelpacific.com
CC:			

Subject:	**BBQ & Fire Pit at Rooftop Deck**	**Status:**	**Open**
Drawing #:		**Spec Sect #:**	
Addendum:		**Submittal #:**	

Potential Schedule &/or Cost Impacts:

Schedule Impact (days):
Cost Impact:

Information Requested: **Date Required: 02/07/2017**

Per the e-mail from John Links, dated 02/01/17, please confirm the "Bull Outdoor Kitchen Grilling Island w/built-in Grill and Sink" is to be installed on the West wall of the elevator vestibule on the rooftop deck, per the attached specs. The installation will include the gas, water connection, the sink shutoffs and drain-down, and the heat trace. Please specify the location of the gas timers for the BBQ and for the Fire Pit on the West wall, and specify whether any GFCI outlets, and/or gas emergency shut-off are desired.

Do not use timers.

Suggestion:

Requesting Firm: Exxel Pacific, Inc.

Submitted By: *Jola Bielecki*

Response:

Date	Response
2-2-2017	See attached Roof Top Elevation for recommended locations for Gas valve box and Outdoor outlets, etc. GC and their Subs will need to verify connection points on BBQ when it is on site. JXW

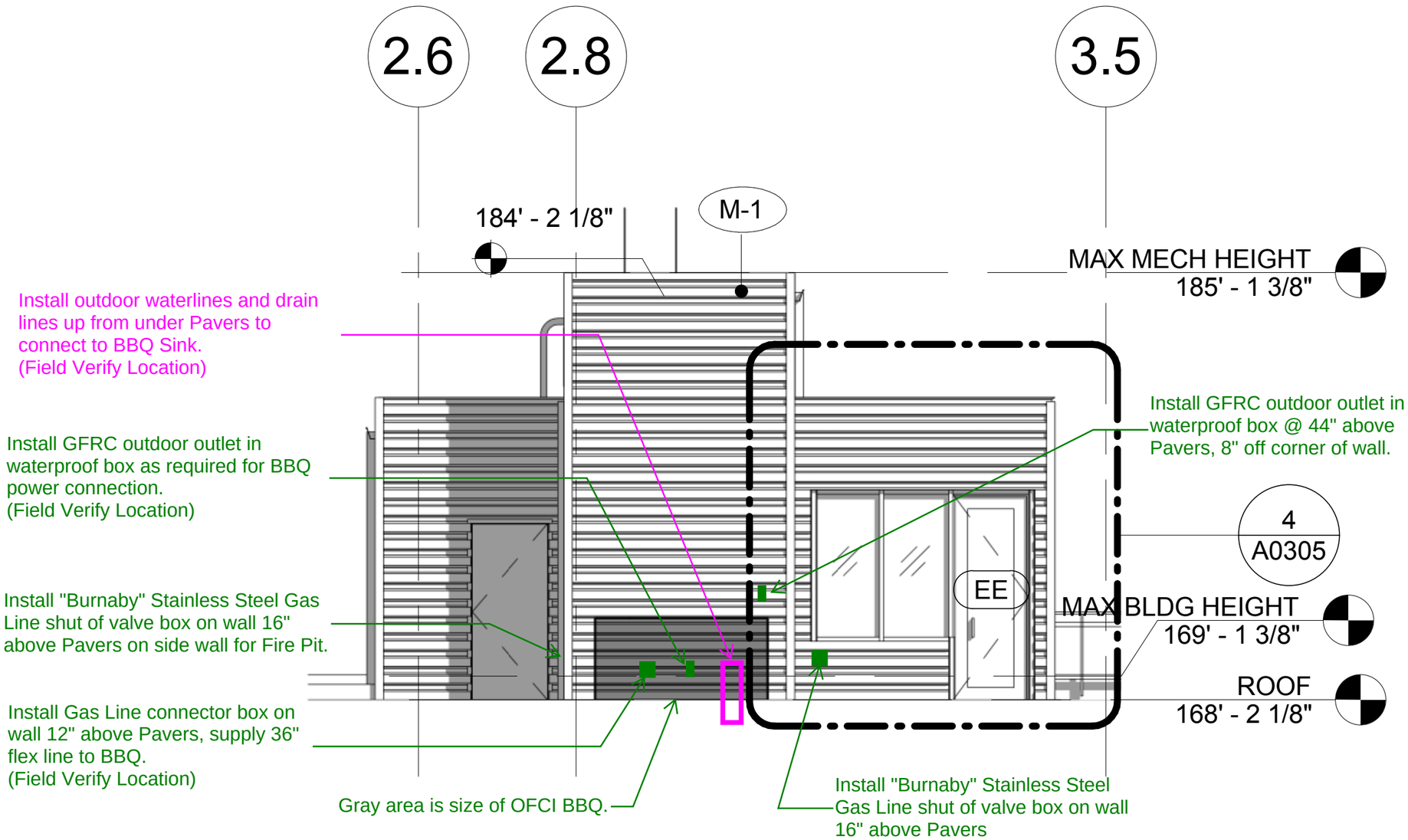

EXTERIOR ELEVATION 6 SHEET A0304-

-NO SCALE-
REF: RFI-065.1
JXW
VIA ARCHITECTURE
2-2-2017

2# GAS PLUG™

NEW DESIGN

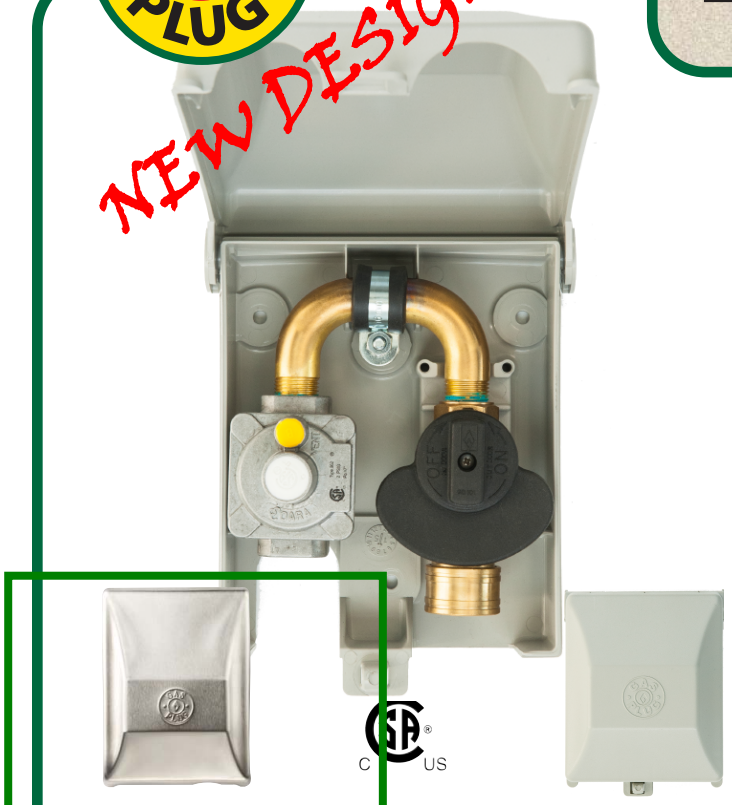

Model # G0101-2#SS

Model # G0101-2#-6

- DESIGNED FOR 2# SYSTEM—60,000 BTU NG
- AVAILABLE IN WEATHER-DURABLE UV RATED, WHITE OR GREY PVC, OR STAINLESS STEEL
- CLEAN, COMPACT DESIGN CONCEALS UNSIGHTLY PIPES AND VALVES
- EASY ACCESS TO KWIK DISCONNECT SAFETY SHUT OFF
- C/W STANDOFFS FOR SIDING INSTALLATIONS
- THERMAL VALVE SHUTS OFF GAS FLOW IN CONDITIONS OF 300°F OR MORE
- CSA APPROVED COMPONENTS
- NEW LOCKABLE COVER

THIS 2# OUTLET BOX IS AN IDEAL MEANS OF SAFELY AND SECURELY CONNECTING YOUR NATURAL GAS BARBEQUE OR PATIO HEATER TO YOUR EXISTING HOMES 2# GAS SUPPLY. THE UNIT IS COMPLETELY ENCLOSED IN A UV FIRE PROTECTED PVC OR STAINLESS STEEL BOX MANUFACTURED WITH AN EXTRA SAFETY FEATURE THAT ENSURES THE GAS SUPPLY IS SHUT OFF BEFORE APPLIANCES CAN BE DISCONNECTED. THIS PROVIDES THE OWNER WITH NOT ONLY PEACE OF MIND BUT ALSO A PRACTICAL AND CLEAN METHOD OF CONCEALING UNSIGHTLY PIPES AND VALVES.

SPECIFICATIONS

Capacity: 60,000 BTU (Natural Gas)

Inlet Connection: 3/8” N.P.T. Bottom or 1/2” N.P.T. Back

Hose Connection: 3/8” Kwik Disconnect

Overall Size: G0101-2# - 6 7/8" x 5 3/8" x 3"
G0101-2#SS - 7” x 5 1/4” x 2 3/8”

Approved for temperatures to -40 deg.

WHY FILL UP WHEN YOU CAN HOOK UP

Distributed by:

BURNABY MANUFACTURING LTD.

3868 COMMERCIAL ST, VANCOUVER, B.C. V5N 4G2
TEL: (604) 877-1599 • FX: (604) 875-6776
EMAIL: info@bbymfg.com • WEB: www.bbymfg.com

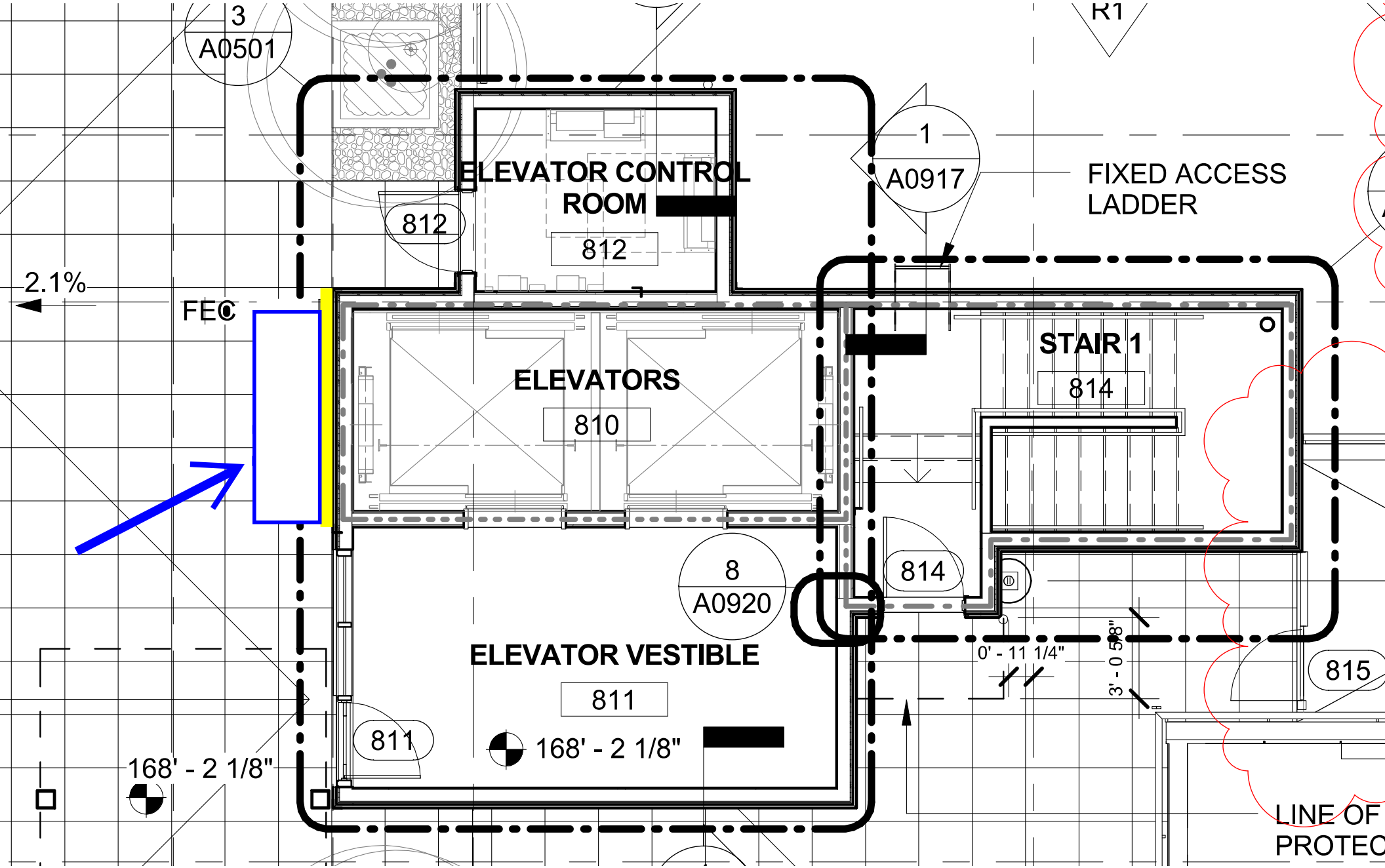
3
A0501
R1
ELEVATOR CONTROL ROOM
812
812
1
A0917
FIXED ACCESS LADDER
2.1%
FEC
ELEVATORS
810
STAIR 1
814
8
A0920
814
ELEVATOR VESTIBLE
811
811
168' - 2 1/8"
168' - 2 1/8"
0' - 11 1/4"
3' - 0 5/8"
815
LINE OF PROTEC

Bull Outdoor Kitchen Grilling Island w/ Built-In Grill

Item#: 3220184

Overview **Specs** Warranty Q&A

- **Island Type**: Straight
- **Base Material**: Rock | Stucco
- **Countertop Material**: Granite | Porcelain Tile
- **Finish**: Aspin Stucco | Blue Gray Stucco | Cream Stucco | Dakota Brown Rock | Forest Falls Rock | Golden Harvest Rock | Grey Stone Rock | Mesa Tan Stucco | Stucco Rock-12 | Stucco Rock-15 | Stucco Rock-16 | Stucco Rock-20
- **Color**: Albergo Tile | Avila Tile | Baltic Brown Granite | Dorado Tile | Fidelio Tile | Kalvi Tile | Luca Tile | Marini Tile | Pinelli Tile | Rigoletto Tile | Salsette Tile | Tan Brown Granite | Taranto Grey Granite | Thane Tile | Traviata Tile | Valencia Tile | Vasai Tile | Veneziano Granite
- **Counter Width**: 95.75"
- **Counter Depth**: 30.75"
- **Counter Height**: 39"
- **Countertop Area**: 20.44 sq. ft.
- **Base Width**: 82.25"
- **Base Depth**: 27.5"
- **Fits Grill**: 32.25" | 39.75" | 47"
- **Unique Feature**: Pre-built island with many options available
- **Items Included**: Grill, stainless steel refrigerator, access door, sink with faucet, GFCI outlet

CERTIFIED SPECIALISTS | WOODLAND DIFFERENCE | SHIPPING INFORMATION

Made in USA

Custom Made | Ships Within: 4 to 6 Weeks
FREE Shipping - Freight
Starting At: $4,629.00

Build Your Bull Outdoor Kitchen Grilling Island w/ Built-In Grill

Step 1: Required
Select Your Island Countertop

- Choose between porcelain tile and granite tile
- Porcelain tile is standard
- Granite tile is an upgarde

Price: $0
Qty: 1

Option Selected
St. Moritz Gray Tile

Select

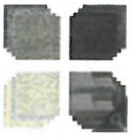

Step 2: Required
Select Your Island Base

- Choose between multiple finishes and material
- Stucco is the standard finish
- All other finish options are an upgarde

Price: $0
Qty: 1

Option Selected
Cream Stucco

Select

Step 3: Required
Select your Built-In Grill

- Standard Angus Grill: 810 sq. in. grilling area | 75,000 BTUs | NG or LP
- Brahma Grill: 1026 sq. in. grilling area | 90,000 BTUs | NG or LP
- 7-Burner Premium: 800 sq. in. grilling area | 105,000 BTUs | NG or LP

Item #: 3220193
Price: $0 – $1,029.00
*Select Your Fuel Type: - Select -
*Grill: - Select -

Step 4: Required
Select your Outdoor Kitchen Storage

- Every island needs storage space for a propane tank or grilling utensils
- All units are constructed of stainless steel
- Storage unit will be installed below grill head

Item #: 3220598
Price: $0 – $489.00
*Storage Option: - Select -

Step 5: Option
Add a Bar Stool

- Provides stylish seating to complete your outdoor space
- Choose from three different finish options

Price: $0
Qty: 1
No Thanks

Option Selected
None

- Two stools included in each choice

Step 6: Required

Select your Island Refrigerator

- Standard Stainless Steel Refrigerator: 4.5 cu. ft. of storage | Suggested to store indoors during cold, winter months
- Outdoor Rated Refrigerator: 4.1 cu. ft. of storage | Can be used outdoors year round

Item #: 3220640

Price: $0 – $759.00

*Refrigerator: - Select -

Step 7: Required

Select your Sink Option

- Please select if you would like the included sink
- Sink is stainless steel with faucet
- Or add additional counter space by not having the sink installed

Item #: 3220688

Price: $0

*Option - Select -

Step 8: Required

Optional Built-In Side Burner

- Prepare side dishes with the extra built-in burner
- Single: Stainless Steel | 12.5" W x 20.5" D | 15,000 BTUs
- Double: Stainless Steel | 26.5" W x 20.5" D | 30,000 BTUs

Item #: 3220647

Price: $0 – $399.00

*Select Burner - Select -

Step 9: Required

FREE Bull Built-In Grill Cover

- Free Grill Cover with purchase of this outdoor kitchen island
- Keeps your grill protected from harsh weather and the elements
- Promotion valid now through February 28th

Price: $0

Qty: 1

Option Selected

FREE Bull Built-In Grill Cover

Step 10: Required

Optional Umbrella

- Add some shade to your outdoor kitchen
- Have an umbrella hole cut out to install your own umbrella
- Get the island complete with an umbrella hold and 9' umbrella

Item #: 3220643

Price: $0 – $198.00

*Select Umbrella: - Select -

Step 11: Option

Additional GFCI Outlet

- Island comes standard with one outlet, add this outlet for additional power
- Will come installed on opposite end of island
- Offers electricity to your outdoor kitchen

Item #: 3220651

Price: $145.00

Add Item ☐

Step 12: Option

Bull Outdoor AM/FM/CD Player with Speakers

- AM/FM Radio
- CD player included
- Speaker system installs easily

Item #: 3220154

Price: $1,137.00

Add Item ☐

Step 13:

FREE Bull IR Searing Burner

- Free Infrared Searing Burner with purchase of this outdoor kitchen island
- Replaces one cast stainless burner, and provides precise heat control
- Promotion valid now through February 28th

Price: FREE

Qty: 1

Total Price: **$4,629.00**

ADD TO CART

Top View

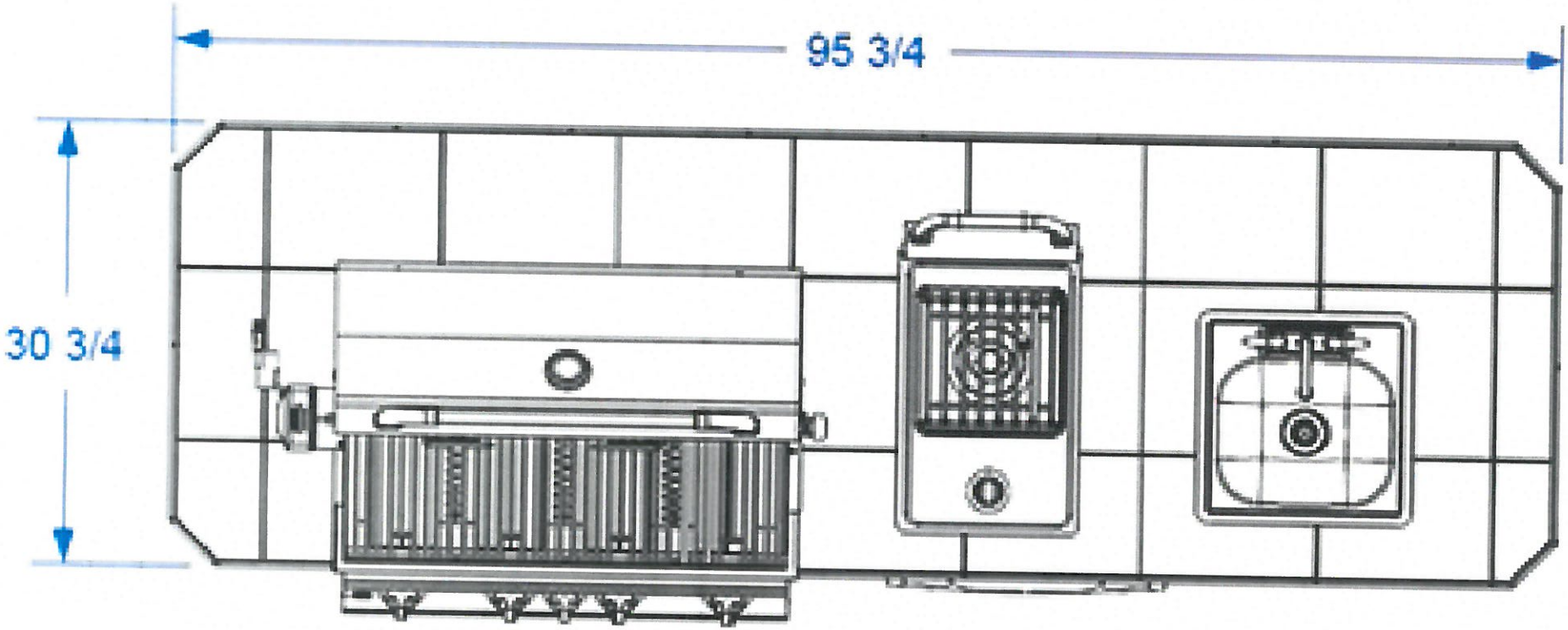

Isometric View

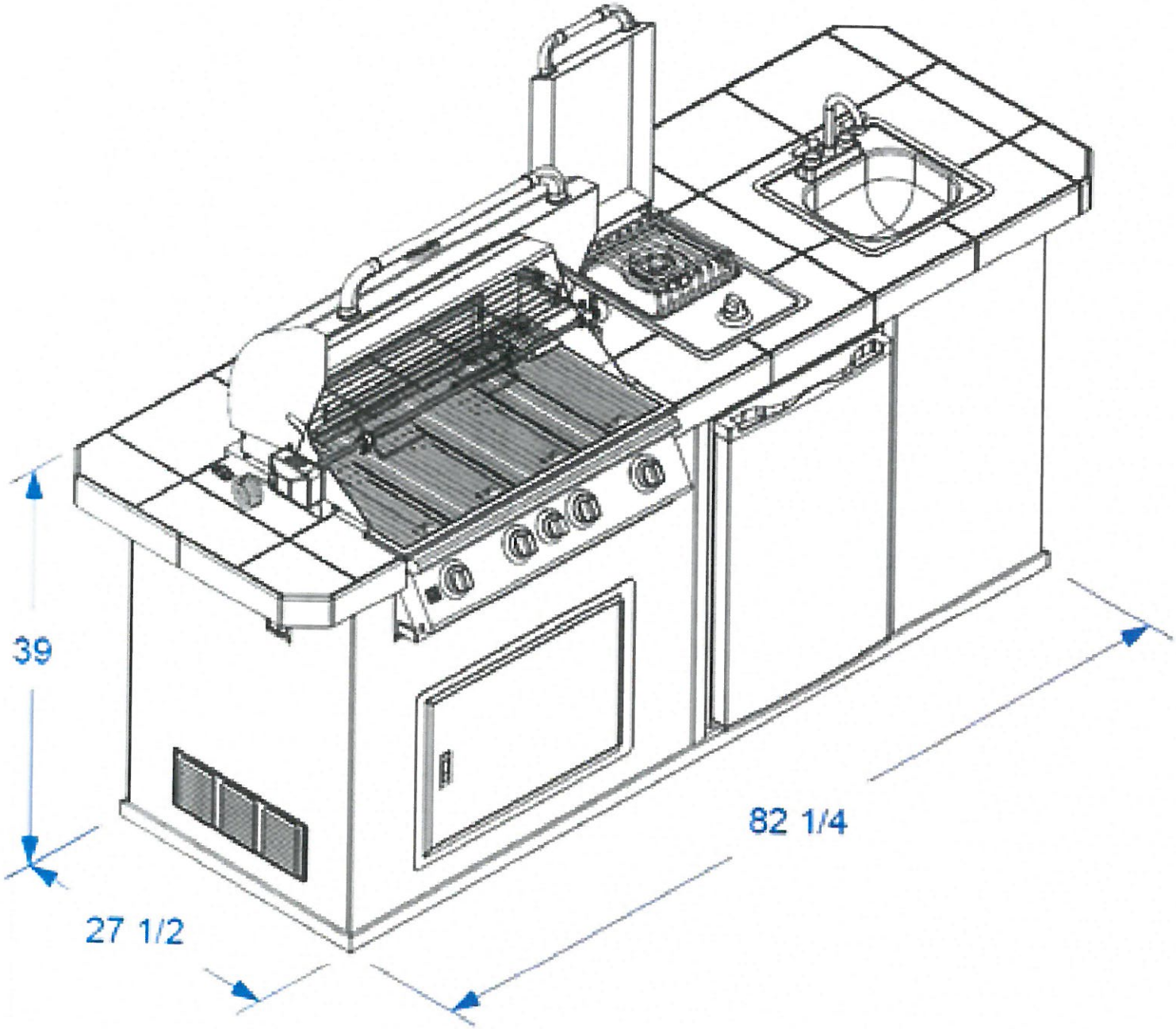

Jola Bielecki

From: John Links <john@mbarrientos.com>
Sent: Wednesday, February 1, 2017 5:39 PM
To: Tim Conner; John Whitlow; Maria Barrientos; Jola Bielecki
Cc: Cora Team
Subject: RE: Cora BBQ

Follow Up Flag: Follow up
Flag Status: Flagged

Tim,

Thank you for the pricing – we want to move forward with the heat trace and shut off. Let me know if you need anything else from us.

John P. Links | barrientos llc
1402 3rd Ave Suite 310 – Seattle, WA 98101
(206) 914-8130

From: Tim Conner [mailto:TimC@exxelpacific.com]
Sent: Wednesday, February 1, 2017 10:54 AM
To: John Links <john@mbarrientos.com>; John Whitlow <jwhitlow@via-architecture.com>; Maria Barrientos <maria@mbarrientos.com>; Jola Bielecki <JolaB@exxelpacific.com>
Cc: Cora Team <CoraTeam@exxelpacific.com>
Subject: RE: Cora BBQ

HI John,
Below is the pricing for the sink shut-offs, and then the subsequent heat trace. Please let me know if you need anything else from me or one way. If you are able to let me know by tomorrow that would be great as we need to complete rough in and inspection, by 2/10.
Thanks
Tim

EXXEL PACIFIC
GENERAL CONTRACTORS
Tim Conner
Superintendent
CORA Apartments
19 W Harrison St
Seattle WA 98119
Phone: 206.453.1005
Fax: 360.671.7616
Cell: 360.815.0766
www.exxelpacific.com

From: Tim Conner
Sent: Wednesday, January 25, 2017 10:40 AM

To: 'John Links' <john@mbarrientos.com>; John Whitlow <jwhitlow@via-architecture.com>; Maria Barrientos <maria@mbarrientos.com>; Jola Bielecki <JolaB@exxelpacific.com>
Cc: Cora Team <CoraTeam@exxelpacific.com>
Subject: RE: Cora BBQ

Hi John,
This is a quick breakdown I got from One Way Plumbing:
Please let me know if you need anything additional
thanks

Install sink with shutoffs and drain-down: **$2,350**

- This option would involve installing shutoffs in the hallway ceiling below the sink. We would need to route the water to the nearest autowash so the maintenance person can shut off the sink and then drain all the water out of it. They would need to make sure they do this yearly so the sink doesn't freeze.
- Excludes access panels (which will need to be fire rated). The faucet will not be a pull-out spray type faucet as these faucets are not easily drained and are more likely to be damaged. Also excludes the countertop at the BBQ. I've budgeted for a simple drop-in sink.

Add heat trace: **$1,620**

- In addition to the option described above, we could install heat trace on all of the piping below the countertop, all the way up to the bottom of the faucet. Note, there is no way to heat trace the faucet itself. There will be some heat that will travel up into the faucet from below that will help prevent it from freezing, but if there were a really cold day, the faucet is eventually going to freeze and break.
- Excludes electrical connections.

EXXEL PACIFIC
GENERAL CONTRACTORS
Tim Conner
Superintendent
CORA Apartments
19 W Harrison St
Seattle WA 98119
Phone: 206.453.1005
Fax: 360.671.7616
Cell: 360.815.0766
www.exxelpacific.com

From: John Links [mailto:john@mbarrientos.com]
Sent: Wednesday, January 25, 2017 9:45 AM
To: John Whitlow <jwhitlow@via-architecture.com>; Maria Barrientos <maria@mbarrientos.com>; Jola Bielecki <JolaB@exxelpacific.com>
Cc: Tim Conner <TimC@exxelpacific.com>; Cora Team <CoraTeam@exxelpacific.com>
Subject: RE: Cora BBQ

John,

We would like to come out of the furred wall.

Additionally, Exxel, can you please price a heat trace for the line? We're concerned about freezing. As discussed, please talk with OWP about potential solutions.

Thanks,

John P. Links | barrientos llc
1402 3rd Ave Suite 310 – Seattle, WA 98101
(206) 914-8130

From: John Whitlow [mailto:jwhitlow@via-architecture.com]
Sent: Wednesday, January 25, 2017 7:43 AM
To: Maria Barrientos <maria@mbarrientos.com>; Jola Bielecki <JolaB@exxelpacific.com>
Cc: John Links <john@mbarrientos.com>
Subject: RE: Cora BBQ

Maria and John,
Exxel's Pumber will need any information you can get on the interior connections for gas and water for the BBQ? Out the back or down through the floor?

Thanks

John X Whitlow, AIA | Technical Architect | VIA Architecture | 206 812 1943 | vcard

---

From: Maria Barrientos [mailto:maria@mbarrientos.com]
Sent: Tuesday, January 24, 2017 4:54 PM
To: Jola Bielecki <JolaB@exxelpacific.com>
Cc: John Whitlow <jwhitlow@via-architecture.com>; John Links <john@mbarrientos.com>
Subject: RE: Cora BBQ

We were planning to purchase and have it delivered to the site for Exxel installation. But would love it if Exxel handled it

maria

From: Jola Bielecki [mailto:JolaB@exxelpacific.com]
Sent: Tuesday, January 24, 2017 4:50 PM
To: John Links <john@mbarrientos.com>; Maria Barrientos <maria@mbarrientos.com>
Cc: John Whitlow <jwhitlow@via-architecture.com>; Cora Team <CoraTeam@exxelpacific.com>; Leyland Rudholm <LeylandR@exxelpacific.com>
Subject: RE: Cora BBQ

Maria and John,

Are you planning to buy the bbq/sink combo unit, or would you us to buy it?

I'll issue the RFI for the West wall. The contractors will be installing gas, water, and the shut-offs, so please let me know if that's your final selection.

Thanks,

EXXEL PACIFIC
GENERAL CONTRACTORS
Jola Bielecki
Project Engineer
Cora Apartments
19 W. Harrison Street
Seattle, WA 98119
Phone: 206.453.1005 ext. 2374
Fax: 360.671.7616
Cell: 425.502.1573
www.exxelpacific.com

From: John Links [mailto:john@mbarrientos.com]
Sent: Tuesday, January 24, 2017 9:36 AM
To: Jola Bielecki <JolaB@exxelpacific.com>; Tim Conner <TimC@exxelpacific.com>
Cc: Maria Barrientos <maria@mbarrientos.com>
Subject: Cora BBQ

Jola,

I received your VM this morning, a link to the built in BBQ and sink, with specs, is below:

http://www.woodlanddirect.com/Outdoor/Grilling-Islands/Bull-Outdoor-Outdoor-Kitchen-Grilling-Island-w-Built-In-Grill

Let me know if I can provide any additional information.

Thanks,

John P. Links | barrientos llc
1402 3rd Ave Suite 310 – Seattle, WA 98101
(206) 914-8130